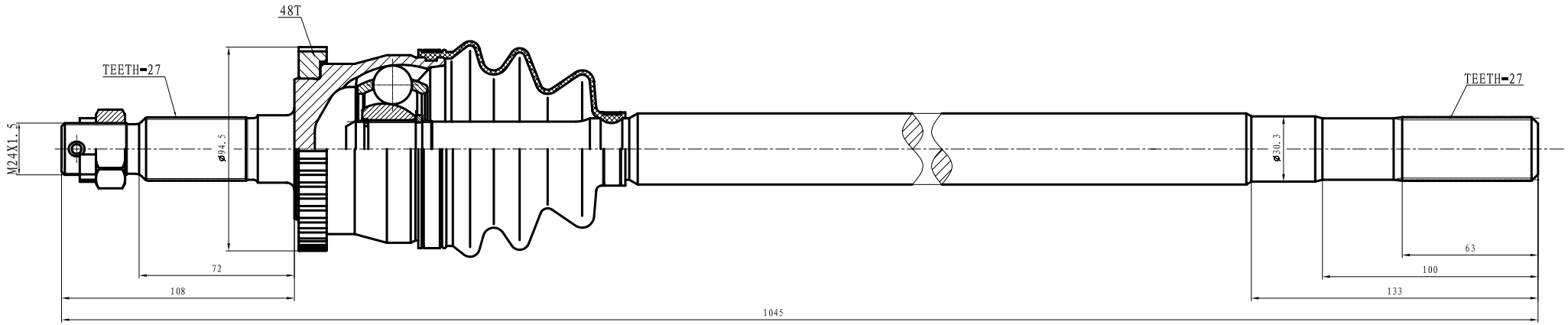
48T
TEETH=27
TEETH=27
M24X1.5
ø34.5
ø30.3
72
108
1045
63
100
133